AQA

Please write clearly in block capitals.

Centre number | | | | | | Candidate number | | | | |

Surname _____

Forename(s) _____

Candidate signature _____
I declare this is my own work.

A-level
COMPUTER SCIENCE

Paper 2

Time allowed: 2 hours 30 minutes

Materials
For this paper you must have:
- a calculator.

Instructions
- Use black ink or black ball-point pen.
- Fill in the boxes at the top of this page.
- Answer **all** questions.
- You must answer the questions in the spaces provided. Do not write outside the box around each page or on blank pages.
- If you need extra space for your answer(s), use the lined pages at the end of this book. Write the question number against your answer(s).
- Do all rough work in this book. Cross through any work you do not want to be marked.

Information
- The marks for questions are shown in brackets.
- The maximum mark for this paper is 100.

Advice
- In some questions you are required to indicate your answer by completely shading a lozenge alongside the appropriate answer as shown.
- If you want to change your answer you must cross out your original answer as shown.
- If you wish to return to an answer previously crossed out, ring the answer you now wish to select as shown.

For Examiner's Use	
Question	Mark
1	
2	
3	
4	
5	
6	
7	
8	
9	
10	
11	
12	
13	
14	
TOTAL	

Do not write outside the box

Answer **all** questions.

0 1 . 1 A bitmap image is 1000 pixels wide by 800 pixels high.

The image takes up 400 kB of storage space when represented as a bitmap, excluding metadata.

Calculate the maximum number of different colours that could appear in the image.

You should show your working.

[3 marks]

Answer _____

Do not write outside the box

0 1 . 2 The same image can also be represented using vector graphics.

The vector graphics representation of the image takes up 2 kB of storage space.

Explain why the amount of storage space taken up by the vector graphics representation of the image is significantly smaller than the space taken up by the bitmap representation.

[3 marks]

0 1 . 3 One advantage of vector graphics compared to bitmap graphics is that fewer bytes are used to represent an image.

State **two** other advantages of vector graphics compared with bitmap graphics.

[2 marks]

Advantage 1

Advantage 2

8

Turn over for the next question

Do not write outside the box

0 2 Describe what thin-client computing is **and** explain **two** reasons why a thin-client system might be chosen in preference to a thick-client system.

[3 marks]

3

0 3 A data communications system can transmit four different signals. Each different signal represents two bits of data.

0 3 . 1 Describe the exact relationship between the bit rate and the baud rate **for this system**.

[1 mark]

0 3 . 2 Describe the relationship between the bit rate of the system and the bandwidth of the transmission medium that the data is transmitted through.

[1 mark]

Do not write outside the box

0 3 . 3 The system uses serial transmission.

Describe the difference between the operation of serial and parallel transmission.

[2 marks]

_____

_____

_____

_____

_____

_____

4

Turn over for the next question

Do not write outside the box

0 4 **Figure 1** shows a circuit with inputs **X0** to **X2** and outputs **Q0** to **Q7**

Figure 1

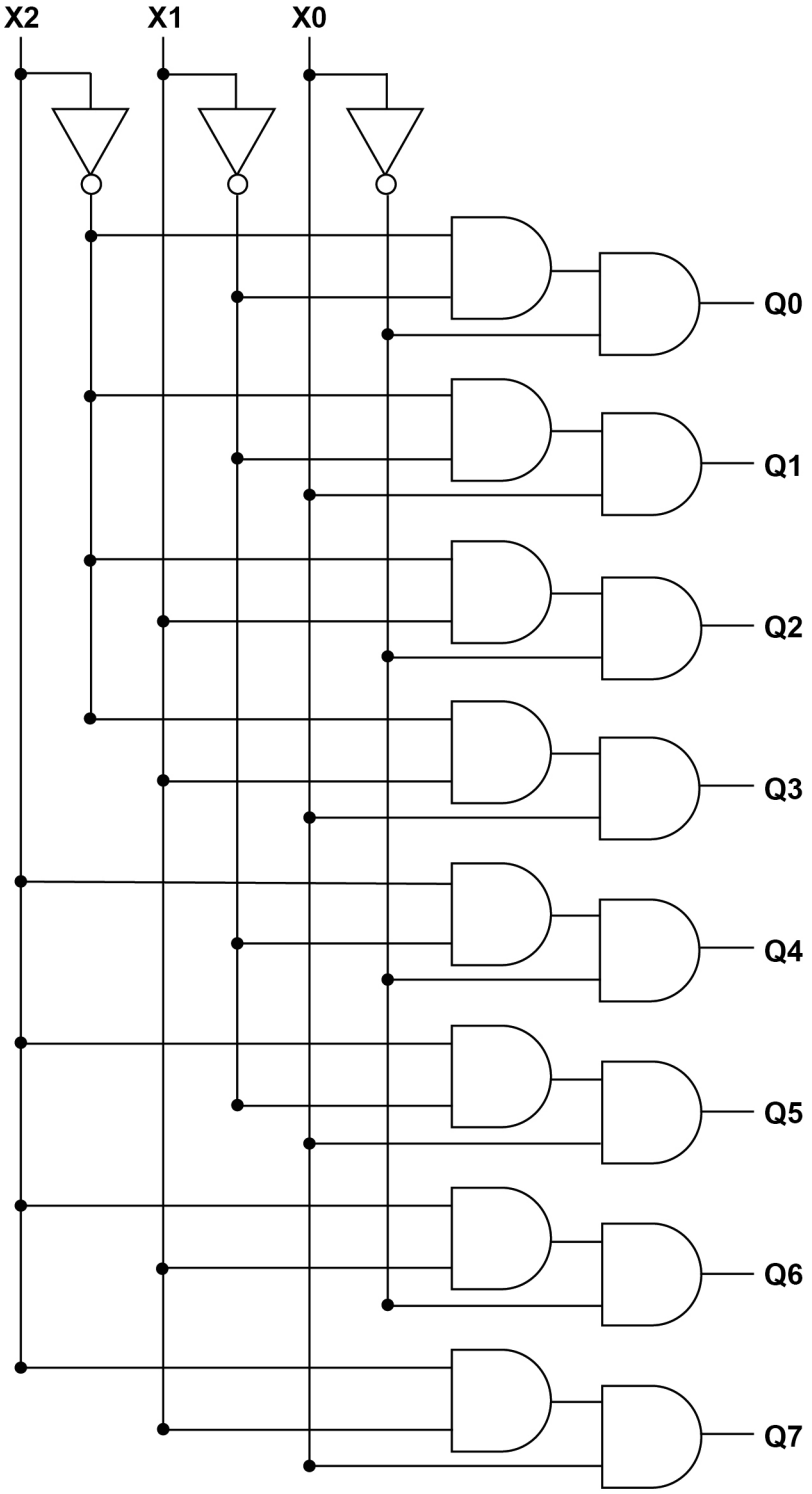

0 4 . 1 Write a Boolean expression to represent the output **Q1** of the circuit in **Figure 1**.

[1 mark]

Q1 = _____

Do not write outside the box

0 4 . 2 Complete the truth table below for the circuit in **Figure 1**.

[3 marks]

INPUTS			OUTPUTS							
X2	**X1**	**X0**	**Q0**	**Q1**	**Q2**	**Q3**	**Q4**	**Q5**	**Q6**	**Q7**
0	0	0								
0	0	1								
0	1	0								
0	1	1								
1	0	0								
1	0	1								
1	1	0								
1	1	1								

0 4 . 3 Explain the purpose of the circuit in **Figure 1**.

Considering the inputs and outputs of the circuit and consulting your answers to Question **04.1** and Question **04.2** may help you to do this.

[2 marks]

Question 4 continues on the next page

Do not write outside the box

Figure 1 is repeated below to help you answer Question **04.4**.

Figure 1 (repeated)

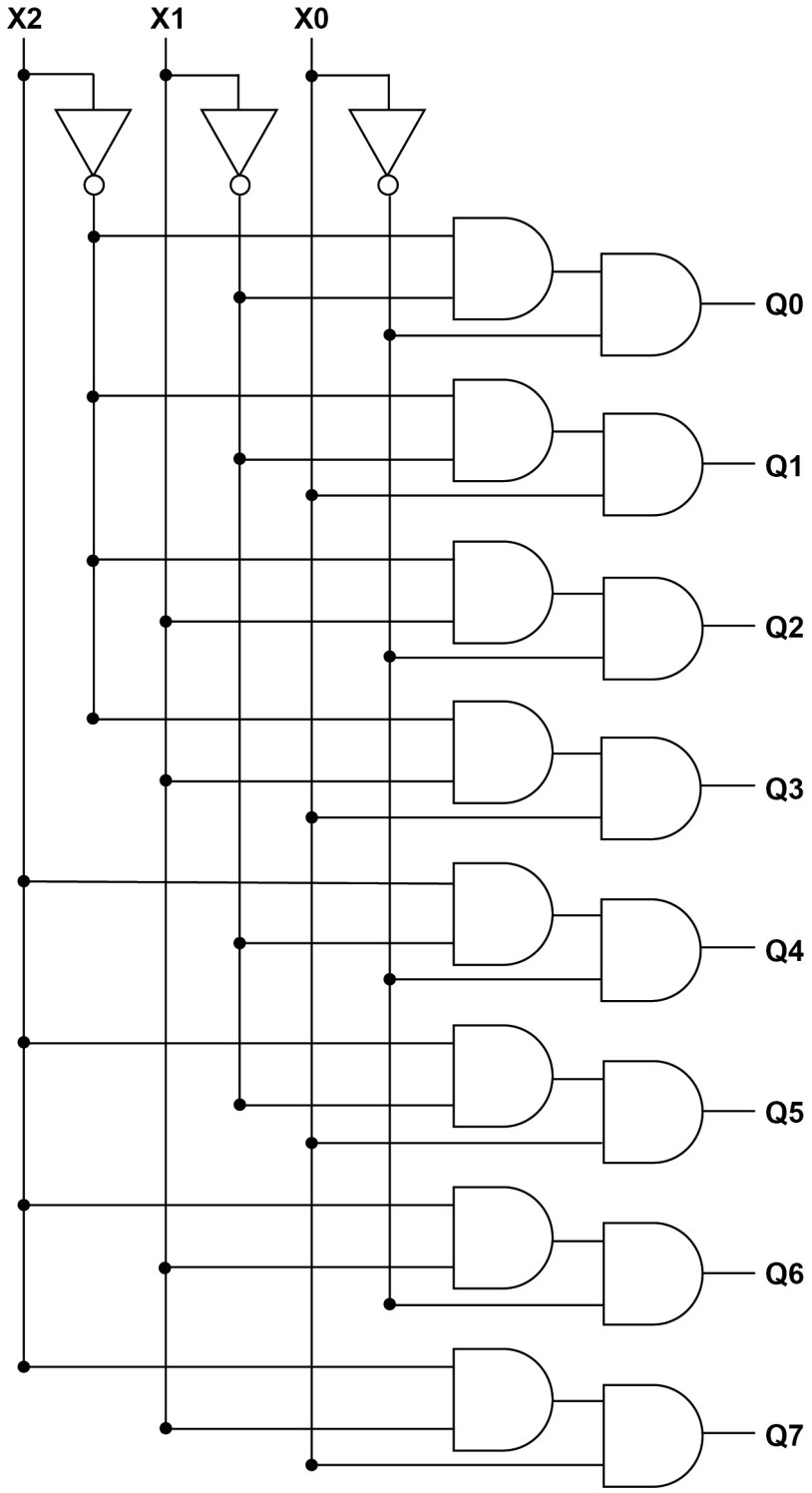

Do not write outside the box

0 4 . 4 The logic circuit in **Figure 2** produces an output **S** that is equivalent to one of the outputs of the logic circuit in **Figure 1**, for the inputs **X0**, **X1** and **X2**.

Figure 2

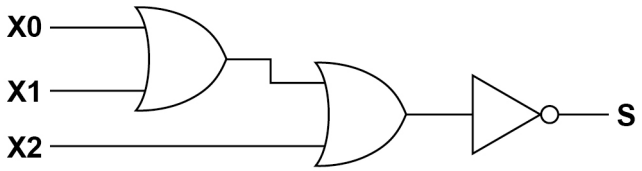

Which output (**Q0** to **Q7**) from **Figure 1** is the output **S** from the circuit in **Figure 2** equivalent to?

[1 mark]

7

Turn over for the next question

Do not write outside the box

0 5 A sports centre uses a relational database to store information about its facilities (such as the swimming pool) and the bookings that have been made to use them.

Figure 3 shows the structure of the relations in the database.

Figure 3

Facility(<u>FacilityID</u>, Description, MaxPeople, PricePerHour)

FacilityForSport(<u>Sport</u>, <u>FacilityID</u>)

Booking(<u>FacilityID</u>, <u>BookingDate</u>, <u>StartTime</u>, EndTime, CustomerID)

Customer(<u>CustomerID</u>, Forename, Surname, EmailAddress)

- The Facility relation stores the different facilities available at the sports centre. Each one is identified by a unique number and has a brief description. For example, the facility with FacilityID 1 has the description 'Outdoor Pitch A'. PricePerHour is the price of hiring a facility for 1 hour. For example, the facility with FacilityID 1 has a price per hour of £17.50.
- The FacilityForSport relation identifies which facilities are suitable for which sports. For example, the facility with FacilityID 1 is suitable for football, rugby and hockey and would therefore require three separate records in this relation.
- The Booking relation stores the bookings that have been made. Bookings must start and end either on the hour, at quarter past, half past or quarter to the hour. A customer can make bookings for more than one facility for the same time. For example, a badminton club secretary might book both of the indoor sports halls for the same time. However, each facility can only be booked by one customer at any one time.
- The Customer relation stores the details of customers who have made bookings.

0 5 . 1 The entity identifier (primary key) for the Booking relation is a composite entity identifier, consisting of these three attributes:

FacilityID, BookingDate, StartTime

An alternative entity identifier could have been chosen, composed of different attributes.

Shade **one** lozenge to indicate which of the following groups of attributes would form a valid alternative entity identifier for the Booking relation.

[1 mark]

A BookingDate, StartTime, EndTime ⬭

B FacilityID, BookingDate, EndTime ⬭

C FacilityID, StartTime, CustomerID ⬭

D FacilityID, BookingDate, EndTime, Sport ⬭

Do not write outside the box

0 5 . 2 A different design was originally proposed for the database. This design did not have the Customer relation and had the following design for the Booking relation:

Booking(FacilityID, BookingDate, StartTime, EndTime, Forename, Surname, EmailAddress)

Explain why this alternative design would have been rejected in favour of the design in **Figure 3**.

[2 marks]

0 5 . 3 Complete the following SQL statement to create the Facility relation specified in **Figure 3**, including the primary key.

[3 marks]

```
CREATE TABLE Facility (
                                                                )
```

Question 5 continues on the next page

Do not write outside the box

Figure 3 is repeated below to help you answer Question **05.4** without having to turn back in the question paper.

Figure 3 (repeated)

Facility(FacilityID, Description, MaxPeople, PricePerHour)

FacilityForSport(Sport, FacilityID)

Booking(FacilityID, BookingDate, StartTime, EndTime, CustomerID)

Customer(CustomerID, Forename, Surname, EmailAddress)

0 5 . 4 A customer wants to book a facility that is suitable for playing basketball on the 15/06/2021 between 14:15 and 16:15

As part of the booking process, a query is needed to list all the existing bookings that would overlap with the new booking.

Write a query that will list all the bookings for facilities that are suitable for playing basketball and which would overlap with the booking that the customer wants to make.

For each booking which would overlap with the new booking only the FacilityID, StartTime and EndTime fields should be listed.

[7 marks]

Do not write outside the box

13

Turn over for the next question

Do not write outside the box

There are no questions printed on this page.

DO NOT WRITE ON THIS PAGE
ANSWER IN THE SPACES PROVIDED

Do not write outside the box

This table is included so that you can answer Question 06.1 on page 17.

Table 1 – Standard AQA assembly language instruction set

LDR Rd, <memory ref>	Load the value stored in the memory location specified by <memory ref> into register d.
STR Rd, <memory ref>	Store the value that is in register d into the memory location specified by <memory ref>.
ADD Rd, Rn, <operand2>	Add the value specified in <operand2> to the value in register n and store the result in register d.
SUB Rd, Rn, <operand2>	Subtract the value specified by <operand2> from the value in register n and store the result in register d.
MOV Rd, <operand2>	Copy the value specified by <operand2> into register d.
CMP Rn, <operand2>	Compare the value stored in register n with the value specified by <operand2>.
B <label>	Always branch to the instruction at position <label> in the program.
B <condition> <label>	Branch to the instruction at position <label> if the last comparison met the criterion specified by <condition>. Possible values for <condition> and their meanings are: EQ: equal to NE: not equal to GT: greater than LT: less than
AND Rd, Rn, <operand2>	Perform a bitwise logical AND operation between the value in register n and the value specified by <operand2> and store the result in register d.
ORR Rd, Rn, <operand2>	Perform a bitwise logical OR operation between the value in register n and the value specified by <operand2> and store the result in register d.
EOR Rd, Rn, <operand2>	Perform a bitwise logical XOR (exclusive or) operation between the value in register n and the value specified by <operand2> and store the result in register d.
MVN Rd, <operand2>	Perform a bitwise logical NOT operation on the value specified by <operand2> and store the result in register d.
LSL Rd, Rn, <operand2>	Logically shift left the value stored in register n by the number of bits specified by <operand2> and store the result in register d.
LSR Rd, Rn, <operand2>	Logically shift right the value stored in register n by the number of bits specified by <operand2> and store the result in register d.
HALT	Stops the execution of the program.

Labels: A label is placed in the code by writing an identifier followed by a colon (:). To refer to a label, the identifier of the label is placed after the branch instruction.

Interpretation of <operand2>

<operand2> can be interpreted in two different ways, depending on whether the first character is a # or an R:

- # – use the decimal value specified after the #, eg #25 means use the decimal value 25
- Rm – use the value stored in register m, eg R6 means use the value stored in register 6

The available general-purpose registers that the programmer can use are numbered 0–12

Do not write outside the box

0 6 **Figure 4** shows an assembly language program which has been written using the AQA assembly language instruction set. The instruction set is explained in **Table 1** on page 15.

Figure 4

```
  CMP R2, #0
  BEQ exit
  MOV R0, #0
  MOV R3, #1
moveleft:
  LSL R2, R2, #1
  LSL R3, R3, #1
  CMP R2, R1
  BLT moveleft
  BEQ mainloop
  LSR R2, R2, #1
  LSR R3, R3, #1
mainloop:
  CMP R1, R2
  BLT skip
  ADD R0, R0, R3
  SUB R1, R1, R2
skip:
  AND R4, R3, #1
  CMP R4, #1
  BEQ skipshiftR2
  LSR R2, R2, #1
skipshiftR2:
  LSR R3, R3, #1
  CMP R3, #0
  BNE mainloop
exit:
  HALT
```

The program takes its input values from registers `R1` and `R2` and stores its output in registers `R0` and `R1`

Do not write outside the box

0 6 . 1 Complete the trace table below to show the results of executing the program in **Figure 4** when the initial values in registers `R1` and `R2` are 34 and 6

Each register can hold a 16-bit value.

You may find it easier to understand the operation of the program if you write the contents of the registers out in both binary and decimal.

You may not need to use all the rows in the table.

[6 marks]

R0	R1	R2	R3	R4
	100010 (34)	110 (6)		

Question 06 continues on the next page

Do not write outside the box

0 6 . 2 The initial values for the program (its inputs) are stored in `R1` and `R2` and the final values stored in `R0` and `R1` are its outputs.

By considering the inputs and the outputs in your trace table for Question **06.1**, describe the purpose of the program.

[2 marks]

8

0 7 . 1 Explain why a laser printer with a built-in wireless network adapter is likely to be a suitable choice of printer for a small office.

[3 marks]

Do not write outside the box

0 7 . 2 Describe the principles of operation of a laser printer.

[6 marks]

9

Turn over for the next question

Do not write outside the box

0 8 Use binary addition in 8-bit two's complement to perform the subtraction:

18 – 72

You **must** show both your working and your final answer in binary.

[2 marks]

2

Do not write outside the box

Turn over for the next question

DO NOT WRITE ON THIS PAGE
ANSWER IN THE SPACES PROVIDED

Do not write outside the box

0 9 Big Data is an important application area for modern computer science.

- Describe what Big Data is, using examples to illustrate your description.
- Explain some of the challenges that Big Data brings with it and the approaches that can be taken to overcome these, in relation to programming and hardware.
- Consider some of the ethical and legal issues that might arise in applications that store data, particularly data about people.

[12 marks]

Do not write outside the box

12

Do not write outside the box

1 0 A particular computer uses a **normalised** floating point representation with an 8-bit mantissa and a 4-bit exponent, both stored using **two's complement**.

1 0 . 1 Four-bit patterns that are stored in this computer's memory are listed in **Figure 5** and are labelled with the letters **A** to **D**. Three of the bit patterns are valid normalised floating point numbers and one is not.

Figure 5

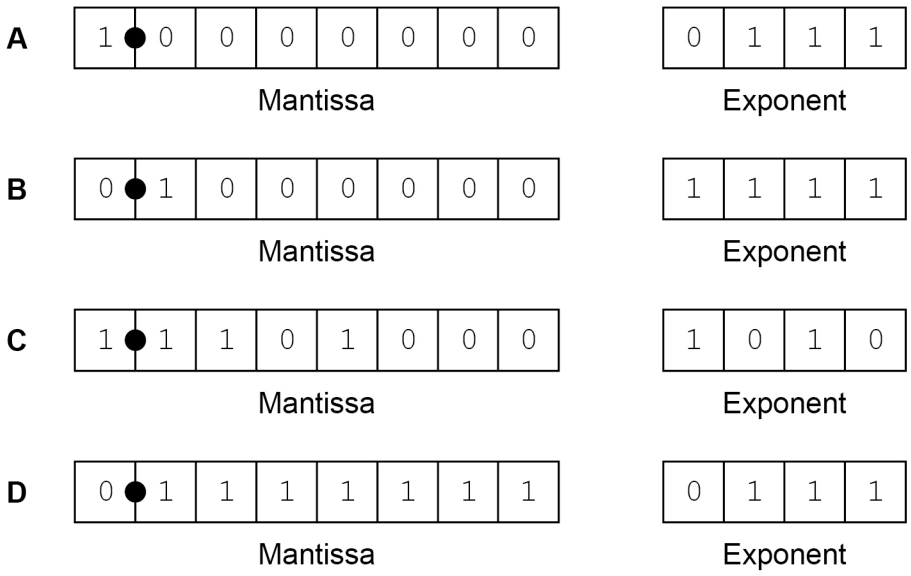

Complete **Table 2** below. In the **Correct letter (A–D)** column write the appropriate letter from **A** to **D** to indicate which bit pattern in **Figure 5** is an example of the type of value described in the **Value description** column.

Do **not** use the same letter more than once.

Table 2

Value description	Correct letter (A–D)
A negative value that is valid in the representation.	
The largest positive value that can be represented in the system.	
A value that is not valid in the representation because it is not normalised.	

[3 marks]

Do not write outside the box

1 0 . 2 **Figure 6** shows a floating point representation of a number:

Figure 6

0 ●	1	1	0	1	0	0	0

Mantissa

0	1	1	0

Exponent

Calculate the decimal equivalent of the number.

You should show your working.

[2 marks]

Answer _____

In this floating point system, the closest possible representation of the decimal number 104.7 is shown in **Figure 7**.

Figure 7

0 ●	1	1	0	1	0	0	1

Mantissa

0	1	1	1

Exponent

By converting this number back to decimal it can be seen that the actual value stored is 105

1 0 . 3 Calculate the **absolute error** that has occurred when representing 104.7 in **Figure 7**.

[1 mark]

Answer _____

Question 10 continues on the next page

Do not write outside the box

1 0 . 4 Calculate the **relative error** that has occurred when representing 104.7 in **Figure 7**.

Express your answer as a percentage to two decimal places.

[1 mark]

Answer

1 0 . 5 Explain why the relative error is usually considered to be a more important measure of error than the absolute error.

[1 mark]

8

Do not write outside the box

1 1 **Figure 8** shows a computer network. The devices connected to the network are identified using IPv4 addresses. When assigning IP addresses, 20 bits have been allocated to the Network IDs (also known as Subnet IDs or subnet addresses) and 12 bits have been allocated to the Host IDs.

Figure 8

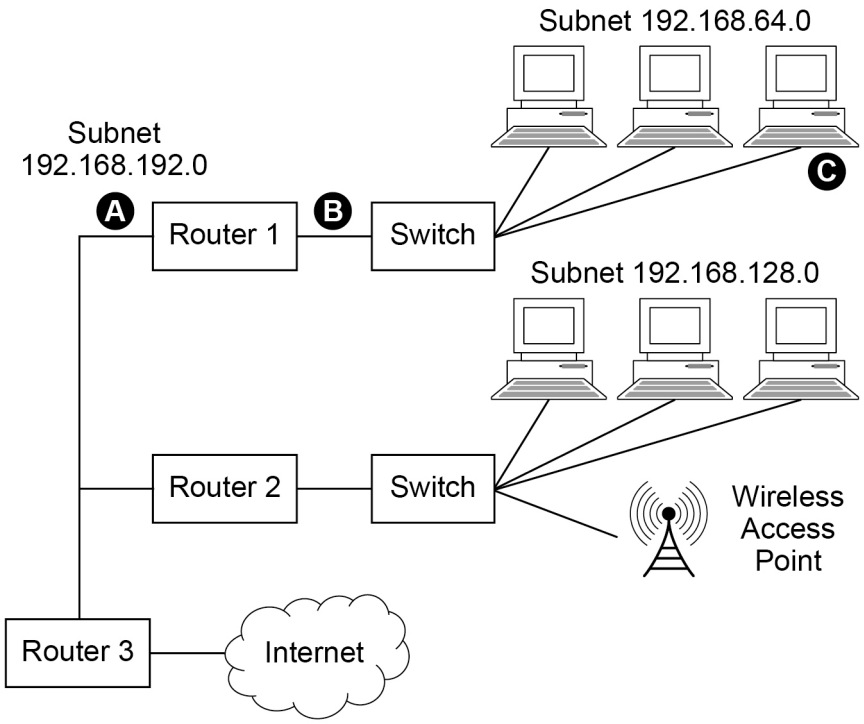

1 1 . 1 State suitable IP addresses for:

[3 marks]

The Router 1 port labelled A _____

The Router 1 port labelled B _____

The computer labelled C _____

Question 11 continues on the next page

Do not write outside the box

1 1 . 2 Shade **one** lozenge to indicate which of the following four subnet masks is the one that has been assigned to the devices connected to the network in **Figure 8**.

[1 mark]

A 255.255.0.0 ⬭

B 255.255.15.0 ⬭

C 255.255.240.0 ⬭

D 255.255.255.0 ⬭

1 1 . 3 The devices on the network in **Figure 8** use IPv4.

State **one** reason why IPv6 has been introduced to replace IPv4.

[1 mark]

_____

_____

_____

1 1 . 4 State the name of the physical topology used in subnet 192.168.64.0 in **Figure 8**.

[1 mark]

_____

Do not write outside the box

1 1 . 5 Laptop computers and other devices can connect to the network via the wireless access point. The wireless connection uses the CSMA/CA protocol with Request to Send/Clear to Send (RTS/CTS).

A laptop connected to the wireless access point has data to send to another computer.

Explain how the CSMA/CA protocol with RTS/CTS will be used during this transmission.

[6 marks]

12

Do not write outside the box

1 2 Describe how MIDI is used to represent digital music.

[2 marks]

2

1 3 . 1 Describe the difference between application software and system software.

[2 marks]

1 3 . 2 Utilities are a type of system software.

Describe what utilities are **and** include an example of a utility in your answer.

[2 marks]

4

Do not write outside the box

1 4 . 1 Shade **one** lozenge to indicate which of these statements about a computer that uses the stored program concept is **false**.

[1 mark]

A Instructions are fetched and executed in sequence. ⬭

B The computer can only be used with one program. ⬭

C The data is stored in the main memory. ⬭

D The program is stored in the main memory. ⬭

1 4 . 2 The control unit is an important component of a processor.

Describe the role of the control unit.

[3 marks]

Question 14 continues on the next page

Do not write outside the box

1 4 . 3 One method that can be used to improve the performance of a processor is to increase the amount of cache memory.

Describe:

- what cache memory is
- what cache memory is used for
- how increasing the amount of cache memory can improve the performance of a processor.

[4 marks]

8

END OF QUESTIONS

Do not write outside the box

There are no questions printed on this page

DO NOT WRITE ON THIS PAGE
ANSWER IN THE SPACES PROVIDED

Do not write outside the box

Question number	**Additional page, if required.** **Write the question numbers in the left-hand margin.**

Do not write outside the box

Question number	**Additional page, if required.** **Write the question numbers in the left-hand margin.**

Do not write outside the box

Question number	**Additional page, if required.** **Write the question numbers in the left-hand margin.**

Copyright information

For confidentiality purposes, all acknowledgements of third-party copyright material are published in a separate booklet. This booklet is published after each live examination series and is available for free download from www.aqa.org.uk.

Permission to reproduce all copyright material has been applied for. In some cases, efforts to contact copyright-holders may have been unsuccessful and AQA will be happy to rectify any omissions of acknowledgements. If you have any queries please contact the Copyright Team.

Copyright © 2021 AQA and its licensors. All rights reserved.